THIS COPY IS PROVIDED ON A RESTRICTED BASIS AND IS NOT TO BE USED IN ANY WAY DETRIMENTAL TO THE INTERESTS OF PANDUIT CORP.

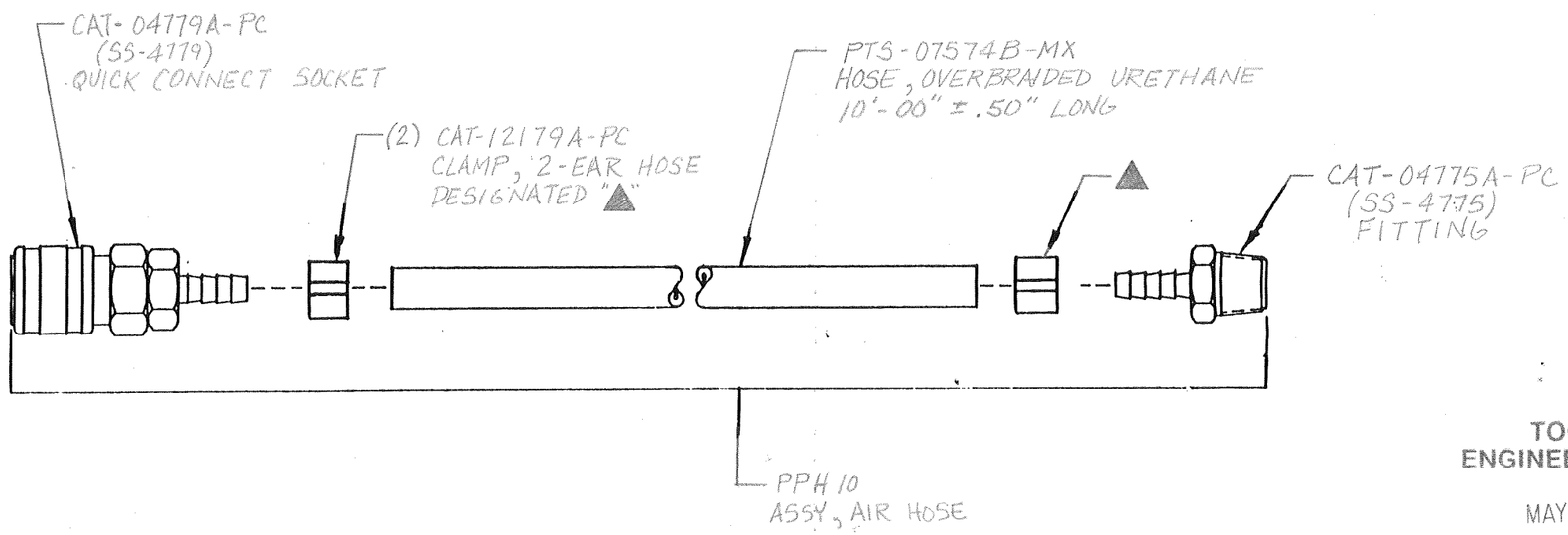

TOOL DIV.
ENGINEERING DEPT.
MAY 0 3 2007
COPY

REV.	DATE	BY	CHK	DESCRIPTION	ECN - R	CUST	SUP
03	20 JL 87	TP	WWC	RELEASED (WAS ON PTS-07513D-MS)	1192 -		SJT

PANDUIT CORP. TINLEY PARK, ILLINOIS

ASSY, AIR HOSE (PPH10)

UNLESS OTHERWISE SPECIFIED, DIMENSIONAL TOLERANCES ARE:
(.X) ± ~ (.XXX) ± ~
(.XX) ± ~ ANGLES ± ~

UNLESS OTHERWISE SPECIFIED, ALL DIMENSIONS ARE GIVEN IN INCHES. THIRD ANGLE PROJECTION.

DRAWN BY: T. PACKLEY
DATE: 20 JL 87
CHK'D: WWC
MAT'L:
SCALE: NONE
DRAWING NO. WA13821B01
DWG. SIZE: B