THIS COPY IS PROVIDED ON A RESTRICTED BASIS AND IS NOT TO BE USED IN ANY WAY DETRIMENTAL TO THE INTERESTS OF PANDUIT CORP.

PANDUIT PART #	STUD SIZE		DIMENSIONS in. [mm]					TOOLS
	ENGLISH	METRIC	L ± .03 [0,8]	W ± .01 [0,3]	C ± .02 [0,5]	M ± .03 [0,8]	H ± .01 [0,3]	
PN18-6LF	#6	M3,5	.82 [20,8]	.27 [6,9]	.22 [5,6]	.63 [16,0]	.14 [3,6]	CT-100A *CT-160 *CT-260 CT-400 CT-600-A (CT-500CH) CT-600-A (CT-550CH) CT-1550 CT-1551 CT-2500 (CT-2550CH)
PN18-6LFW	#6	M3,5	.85 [21,5]	.29 [7,4]	.22 [5,6]	.64 [16,2]	.14 [3,6]	
PN18-8LF	#8	M4	.89 [22,7]	.29 [7,4]	.25 [6,4]	.68 [17,3]	.16 [4,1]	
PN18-10LF	#10	--	.89 [22,5]	.33 [8,4]	.25 [6,4]	.68 [17,3]	.19 [4,8]	
PN18-10LFN	#10	--	.91 [23,2]	.29 [7,4]	.25 [6,4]	.73 [17,4]	.19 [4,8]	

*PANDUIT APPROVED TOOL

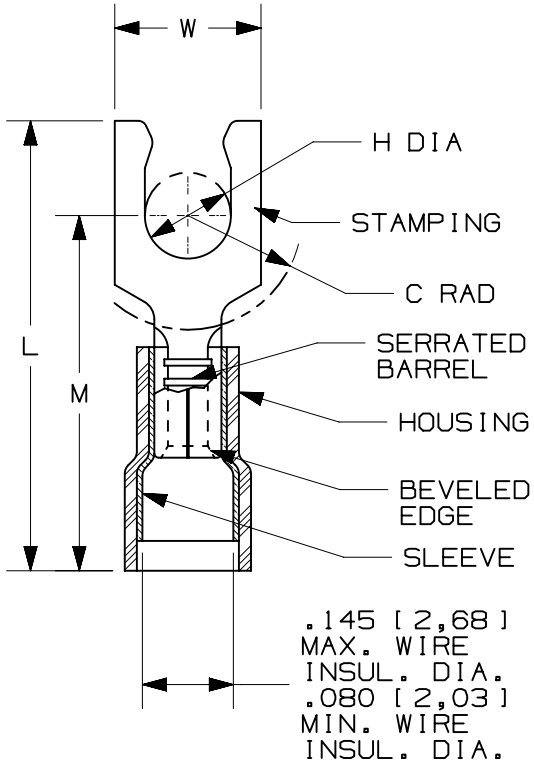

NOTES:

1. cULus LISTED FOR:
   A. 22-18 AWG [0,5-1,5 mm²] SOLID OR STRANDED COPPER WIRE
   B. 221°F [105°C] MAX. OPERATING TEMPERATURE
   C. 600V. MAX. BLDG WIRE
      (1000 V. MAX. IN SIGNS, FIXTURES & LUMINAIRES)
2. SEE www.panduit.com FOR PACKAGE QUANTITIES
3. MATERIAL:
   A. STAMPING: .032" [0,8] THK COPPER, TIN PLATED
   B. HOUSING: NYLON, RED
   C. SLEEVE: BRASS, TIN PLATED
4. DIMENSIONS IN BRACKETS ARE METRIC EQUIVALENT
5. WIRE STRIP LENGTH: 7/32 $^{+1/32}_{-0}$ [5,6 $^{+0,8}_{-0}$]

c UL us
LISTED
587H
E52164

REV	DATE	BY	CHK	APR	DESCRIPTION	ECN
10	06/14	MBY	JHNU	RGB	REVISED NOTES, MOVED TOOLS TO TABLE, REVISED CERTIFICATION	N41290BA-A41290
09	09.13.12	BDK	LCA	VMB	ADDED METRIC EQUIVALENT. CHANGE PACKAGING NOTE. REVISED INSTALLATION TOOLS NOTE. BROUGHT DRAWING TO CURRENT STANDARDS.	A41290

TITLE
#22-18 BARREL NYLON INSULATED LOCKING FORK, .145 [3,68] MAX. WIRE INSULATION DIAMETER
CUSTOMER DRAWING

ITEM REVISION NAME: N41290BA/10
DATASET FILE NAME: N41290BA_DC/10A

UNLESS OTHERWISE SPECIFIED, DIMENSIONAL TOLERANCES ARE: IN [mm]
.X ± .XXX ±
.XX ± ANGLES ±
THIRD ANGLE PROJECTION

PANDUIT

MATERIAL: SEE NOTES

DRAWING NUMBER: A41290

DRAWN BY	DATE	CHK	SCALE	SHEET 1 OF 1	SIZE
DAW		CJH	N.T.S.		A

D10100DA/12