THIS COPY IS PROVIDED ON A RESTRICTED BASIS AND IS NOT TO BE USED IN ANY WAY DETRIMENTAL TO THE INTERESTS OF PANDUIT CORP.

PANDUIT PART #	STUD SIZE		DIMENSIONS in. [mm]					TOOLS
	ENGLISH	METRIC	L ± .03 [0,76]	W ± .01 [0,25]	C ± .02 [0,51]	M ± .03 [0,76]	H ± .01 [0,25]	
PMV2-3FB	--	M3	.84 [21,3]	.23 [5,84]	.19 [4,83]	.70 [17,78]	.13 [3,30]	CT-100A *CT-160 *CT-260 *CT-400 CT-600-A (CT-500CH) CT-600-A (CT-550CH) CT-1550 CT-1551 CT-2500 (CT-2550CH)
PV14-6F	#6	M3,5	.84 [21,3]	.28 [7,11]	.19 [4,83]	.70 [17,8]	.15 [3,81]	
PV14-6FN	#6	M3,5	.84 [21,3]	.24 [6,10]	.19 [4,83]	.70 [17,8]	.15 [3,81]	
PV14-8F	#8	M4	.90 [22,9]	.31 [7,87]	.23 [5,84]	.74 [18,8]	.17 [4,32]	
PV14-10F	#10	--	.92 [23,4]	.34 [8,64]	.24 [6,10]	.76 [19,3]	.20 [5,08]	
PV14-10FN	#10	--	.92 [23,4]	.31 [7,87]	.24 [6,10]	.76 [19,3]	.20 [5,08]	
PMV2-5FB	--	M5	.92 [23,4]	.34 [8,64]	.24 [6,10]	.76 [9,30]	.21 [5,33]	
PV14-14F	1/4"	M6	1.09 [26,7]	.44 [11,2]	.32 [8,13]	.84 [21,3]	.27 [6,86]	

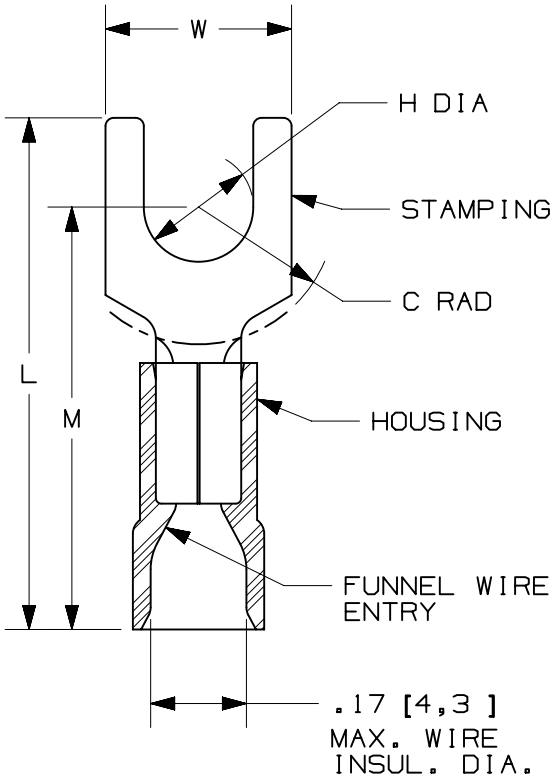

*PANDUIT APPROVED TOOL

NOTES:

1. cULus LISTED FOR:
   A. 16-14 AWG [1,5-2,5 mm²]
      SOLID OR STRANDED COPPER WIRE
   B. 221°F [105°C] MAX. OPERATING TEMPERATURE
   C. 600V. MAX. BLDG WIRE
      (1000 V. MAX. IN SIGNS, FIXTURES & LUMINAIRES)
2. SEE www.panduit.com FOR PACKAGE QUANTITIES
3. MATERIAL:
   A. STAMPING: .03" [0,8] THK COPPER, TIN PLATED
   B. HOUSING: VINYL, BLUE
4. DIMENSIONS IN BRACKETS ARE METRIC EQUIVALENT
5. WIRE STRIP LENGTH: 5/16 $^{+1/32}_{-0}$ [7,9 $^{+0,8}_{-0}$]

c UL us
LISTED
587H
E52164

REV	DATE	BY	CHK	APR	DESCRIPTION	ECN
06	07/14	MBY	JHNU	RGB	REVISED NOTES, MOVED TOOLS TO TABLE, REVISED CERTIFICATION	N41193-A41193
05	06.11.12	BDK	LCA	VMB	ADDED PMV2-3FB & PMV2-5FB TO CHART. REVISED NOTES. UPDATED DRAWING TO CURRENT STANDARD.	A41193

TITLE
FORK TERMINALS, 2 PC. VINYL INSULATED, #16-14
CUSTOMER DRAWING

ITEM REVISION NAME: N41193BA/06
DATASET FILE NAME: N41193BA_DC/06A

PANDUIT™

UNLESS OTHERWISE SPECIFIED, DIMENSIONAL TOLERANCES ARE: IN [mm]
.X ± .XXX ±
.XX ± ANGLES ±
THIRD ANGLE PROJECTION

MATERIAL: SEE NOTES

DRAWING NUMBER: A41193

DRAWN BY	DATE	CHK	SCALE	SHEET 1 OF 1	SIZE
FES	-	FES	N.T.S.		A

D10100DA/12