THIS COPY IS PROVIDED ON A RESTRICTED BASIS AND IS NOT TO BE USED IN ANY WAY DETRIMENTAL TO THE INTERESTS OF PANDUIT CORP.

PANDUIT PART NUMBER	STUD SIZE	DIMENSIONS - in.					TOOLS
		A ± .03	W ± .01	C ± .02	M ± .03	H ± .01	
PN18-6FN	#6	.78 (19.8)	.24 (6.1)	.20 (5.1)	.64 (16.3)	.15 (3.8)	*CT-100A +**CT-160 +**CT-260 **CT-400 **CT-600-A (CT-500CH) **CT-600-A (CT-550CH) **CT-1550 **CT-1551 **CT-2500 (CT-2550CH)
PN18-6F	#6	.78 (19.8)	.30 (7.6)	.20 (5.1)	.64 (16.3)	.15 (3.8)	
PN18-8F	#8	.85 (21.6)	.32 (8.1)	.23 (5.8)	.68 (17.3)	.17 (4.3)	
PN18-10F	#10	.86 (21.8)	.35 (8.9)	.25 (6.3)	.70 (17.8)	.20 (5.1)	
PN18-10FN	#10	.86 (21.8)	.31 (7.9)	.25 (6.3)	.70 (17.8)	.20 (5.1)	
PN18-14F	1/4"	1.03 (26.2)	.44 (11.2)	.25 (6.3)	.78 (19.8)	.27 (6.9)	

+PANDUIT APPROVED TOOL
*FOR USE ON #22-18 AWG SOLID OR STRANDED COPPER WIRE
**FOR USE ON #22-16 AWG SOLID OR STRANDED COPPER WIRE

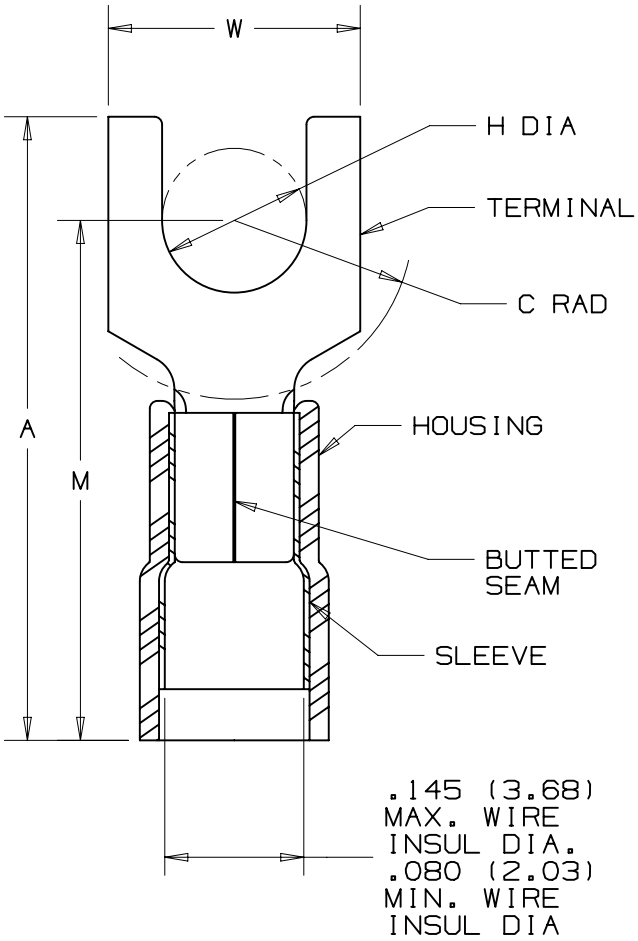

NOTES:

1. cULus LISTED FOR:
   A. 221° F (105° C) MAX TEMP RATING
   B. 600 V MAX. VOLTAGE RATING
2. SEE WWW.PANDUIT.COM FOR PACKAGE QUANTITIES
3. MATERIAL:
   A. STAMPING - .03" (.8) THK, COPPER TIN PLATED
   B. HOUSING - NYLON, RED
   C. SLEEVE - BRASS, TIN PLATED
4. DIMENSIONS IN BRACKETS ARE IN MILLIMETERS
5. WIRE STRIP LENGTH: 7/32 + 1/32 (5.6 + .8) - 0 - 0

c UL us
LISTED
587H
E52164

REV	DATE	BY	CHK	APR	DESCRIPTION	ECN
05	06/14	MBY	JHNU	RGB	REVISED NOTES, MOVED TOOLS TO TABLE, REVISED CERTIFICATION, UPDATED BORDER	N41191BA-A41191

TITLE
3PC. NYLON INSULATED, 22-18 BARREL, FORKS
CUSTOMER DRAWING

ITEM REVISION NAME: N41191BA/06
DATASET FILE NAME: N41191BA/06

PANDUIT

UNLESS OTHERWISE SPECIFIED, DIMENSIONAL TOLERANCES ARE: IN [mm]
.X ± .XXX ±
.XX ± ANGLES ±
THIRD ANGLE PROJECTION

MATERIAL: SEE NOTES

DRAWING NUMBER: A41191

DRAWN BY	DATE	CHK	SCALE	SHT 1 OF 1	SIZE
FES		RLS	NONE		A

D10100DA/16